NITTOSEIKO
Taking new steps forward together

Electronic Positive Displacement Flow Meter

Flow Eye®

SPECIFICATIONS

SSV10951 23.11

1. Outline

Flow Eye is a flow meter loading an electronic indicating & counting unit on the rotary piston type simplest construction among positive displacement flow meters.
This electronic positive displacement flow meter is equipped with a “user setting function” which enables the user to make setting easily in the field, and can be used for a wide variety of applications.

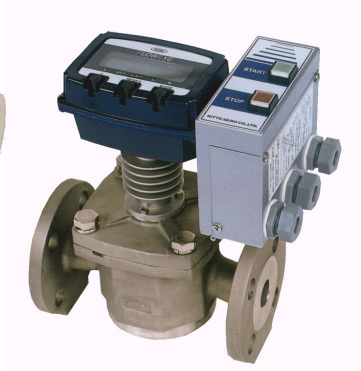

2. Features

- Realized high durability and high reliability with rotor only as movable part
- Setting mode in the field is possible by button operation on the counting unit.
- Easy maintenance in the field by simulation output
- No need of any external power supply in the case of the field indication only
- Available placing the batch system only with valve (Batch type only)

3. Specifications

Measuring unit

Nominal size symbol	020	025	040
Measured liquid	Chemical liquid, edible liquid, water, petroleum, etc.		
Nominal size	20A	25A	40A
Liquid viscosity	0.5～10,000mPa・s		
Liquid temperature	-10～80℃		
Liquid pressure	1.0MPa or less		
Measuring accuracy	Within ±0.5%		
Standard connection	JIS10K RF Flange		
Material	Body, Body cover：SCS14 Stainless steel casting, Rotor：PPS Special plastic, Eccentric bearing：Carbon		

Counting unit

Nominal size symbol			020	025	040
Kind of type			Pulse & alarm output type, Analogue output type, Batch type (For AC or 24V DC)		
Indication	Display unit		Numerical indication：7-segment LCD 5W x 10H, 8 digits, mode and alarm indication：LCD 2H		
Indication	Indication item	Integrated flow rate	Integrated flow rate：8 digits (MODE1) For Pulse & alarm output type and analogue output type　Resettable integrated flow rate：8 digits (MODE4) For batch type　Batch counter：6 digits (MODE4)		
Indication	Indication item	Integrated flow rate – Min. unit	0.01L～1m³	0.1L～1m³	0.1L～1m³
Indication	Indication item	Momentary flow rate	Momentary flow rate (/h)：4 1/2 digits (MODE2), Momentary flow rate (/min)：4 1/2 digits (MODE3) Momentary flow rate (%)：4 digits (MODE5)		
Indication	Indication item	Momentary flow rate – Min. unit /h	0.1L/h～0.01m³/h	1L/h～0.1m³/h	1L/h～0.1m³/h
Indication	Indication item	Momentary flow rate – Min. unit /min	0.01L/min～1L/min	0.01L/min～1L/min	0.01L/min～1L/min
Indication	Indication item	Momentary flow rate – Note 1: Either one of "/h" or "/min" can be indicated. It should be selected by setting.			
Indication	Indication item	Alarm	Alarm for upper limit flow rate (HIGH), alarm for lower limit flow rate (LOW), battery alarm (BATT).		
Indication	Indication item	Note 2: Bothe integrated flow rate and momentary flow rate cannot be indicated simultaneously. Note 3: Indication item can be changed by pressing the "MODE" button located on the front of the counting unit.			
Output	Pulse & alarm output type	No. of output	2 points		
Output	Pulse & alarm output type	Output assignment	To each of SIG1 and SIG2, one is selected and assigned from among the respective outputs of "Unit pulse", "Unitless pulse", "Alarm for upper limit", "Alarm for lower limit", "Alarm for upper and lower limit" and "Battery alarm"		
Output	Pulse & alarm output type	Type of signal	Voltage no-contact output or open collector output Voltage no-contact： Signal level H: Approx. equal to voltage of external power (at no load) (Approx. 24V DC for Batch type) L:0.5V or less (at no load) Output resistance：Approx. 2.3kΩ (short circuit protection resistance：Approx. 100Ω) Open collector： Voltage & current：27V DC, 30mA Voltage at ON：0.5V or less		
Output	Pulse & alarm output type	Signal logic	Positive or negative logic Positive logic：Logic 1 at H (Transistor：OFF)　Negative logic：Logic 1 at L(Transistor：ON)		
Output	Pulse & alarm output type	Unit pulse	0.01L/P～1m³/P	0.1L/P～1m³/P	0.1L/P～1m³/P
Output	Pulse & alarm output type	Unitless pulse	9.6mL	35.1mL	87.9mL
Output	Pulse & alarm output type	Pulse signal width	0.5～20ms or 5～200ms		
Output	Analogue output type	No. of output	1 point		
Output	Analogue output type	Output assignment	Momentary flow rate		
Output	Analogue output type	Type of signal	4 ～ 20mA DC		
Output	Analogue output type	Conversion accuracy	±0.5% (Full scale)		
Output	Analogue output type	Resolution	1/1000		
Output	Analogue output type	Allowable load resistance	500Ω or less		

Nominal size and Volume symbol			020A0	025A0	040A0
Output	Batch type	No. of output	4 points		
		Output assignment	SIG1、SIG2:To each of SIG1 and SIG2, one is selected and assigned from among the respective outputs of Unit pulse, Unitless pulse, Upper limit alarm, Lower limit alarm, and Upper and lower limit alarm. Control output: Metering signal 1, Metering signal 2		
		Kind of signal	Pulse output, alarm signal: Refer to kind of signal at article of pulse & alarm signal		
			Control output: AC type	Control output: 24V DV type	
			Metering signal 1: Voltage no-contact, Triac Output voltage Approx. equal to external pow er voltage Load current 0.5A	Metering signal 1: Voltage contact Output voltage Approx. equal to external pow er voltage Load current 2A	
			Metering signal 2: No-voltage contact Contact capacity 250V AC 2A, 30V DC 2A	Metering signal 2: No-voltage contact Contact capacity 250V AC 2A, 30V DC 2A	
	Note 4: Either one of "Pulse & alarm output" or "Analog output" is available. Please select type w hen placing order. Note 5: All output type and batch type require external pow er supply.				
Power	Field indication type (without output signal)		Built-in lithium battery (3.6V DC ; Service life 5 years) Vary from use conditions.		
	Pulse & alarm output type		External pow er supply is required. Voltage 12～24V DC±10%, Current consumption Approx. 25mA (at 12V DC) / Approx. 38mA (at 24V DC)		
	Analog output type		External pow er supply is required. Voltage 24V DC±10%, Current consumption Approx. 22mA		
	Batch type		AC type ; External pow er supply is required, Voltage 100～220V AC±10% 50/60Hz, Current consumptoin Approx.50mA (Except for current consumption of Metering signal 1)		
			24V DC type ; External pow er supply is required Voltage 24V DC ±10%, Current consumption Approx. 120mA (Except for current consumption of Metering signal 1)		
Ambient temperature			-10～60℃		
Explosion proof			Non-explosion proof		
Water proof			JIS C 0920 w ater proof (Except for Batch type)		
Material			Aluminum die casting (Except for Batch type)		

※1: "Battery alarm" is only for the flow meter w ith battery

4. Flow range (Unit: L/h)

Viscosity (mPa･s)	Example of liquid	Flow range		
		020A0	025A0	040A0
	Water	100～ 700	300～2,100	650～4,500
0.5～	Gasoline	130～ 850	380～2,500	850～5,500
1～	Kerosene	100～ 850	300～2,500	650～5,500
4～	Light oil	70～1,000	200～3,000	450～6,500
10～	Heavy oil A	40～1,000	120～3,000	260～6,500
50～	Heavy oil B	25～1,000	75～3,000	160～6,500
100～	Heavy oil C	15～1,000	45～3,000	100～6,500
500～		15～ 800	45～2,400	100～5,200
1,000～		15～ 600	45～1,800	100～3,900
5,000～10,000		15～ 300	45～ 900	100～2,000

Note: When selecting a model of flow meter, please select it so that normal flow range is 40～60% of its Max. flow.

5. Pressure loss

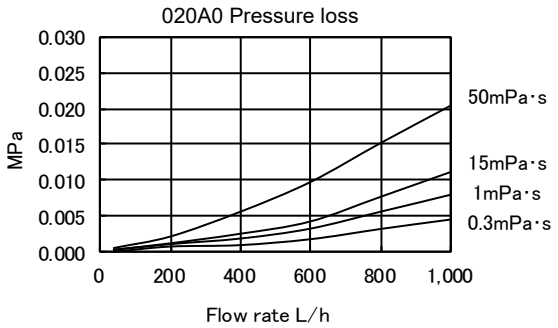

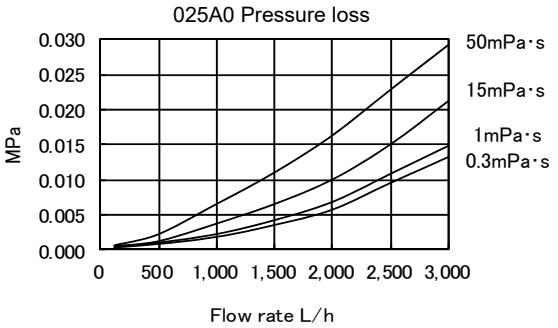

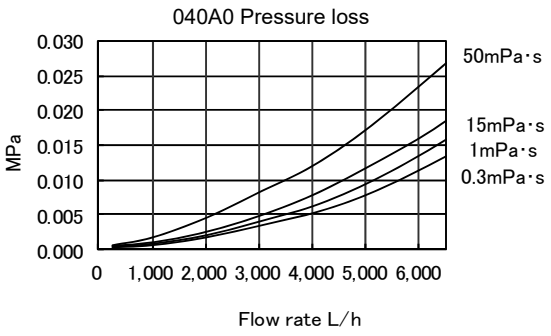

6. Remote measurement system

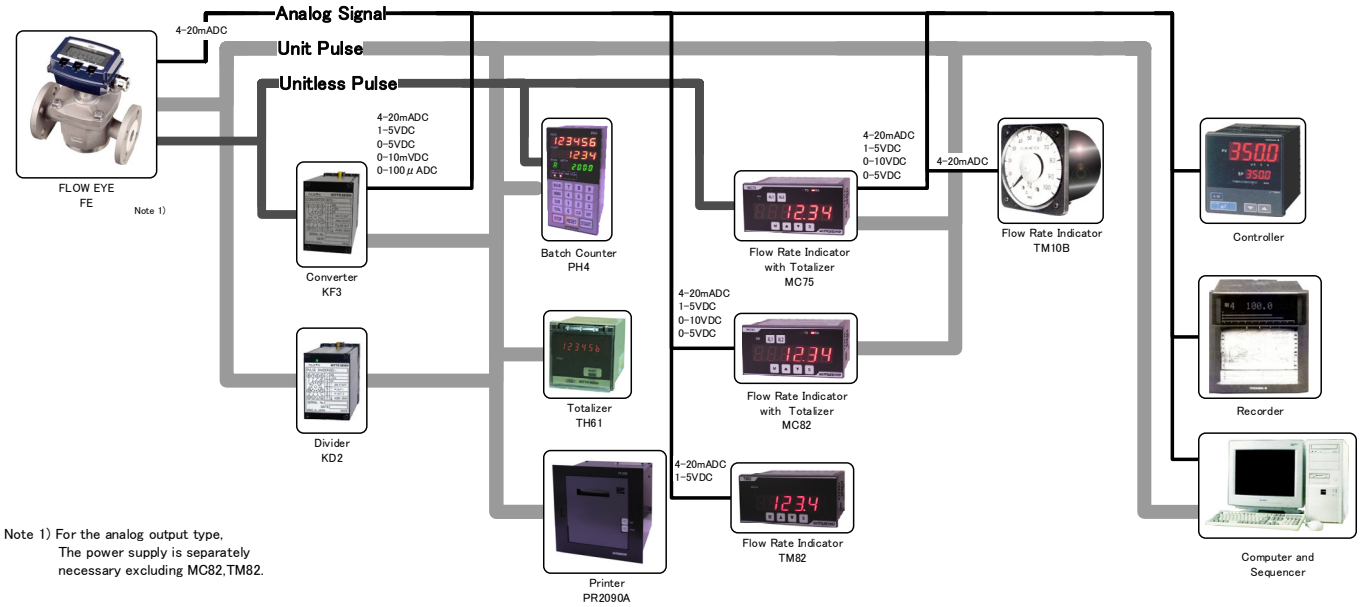

Note 1) For the analog output type,
The power supply is separately
necessary excluding MC82,TM82.

※The detailed input/output conditions vary depending on the specifications of the respective converter and receivers. Check with the specification sheet of the respective instruments.

7. External dimensions (Unit: mm)

Field indication type

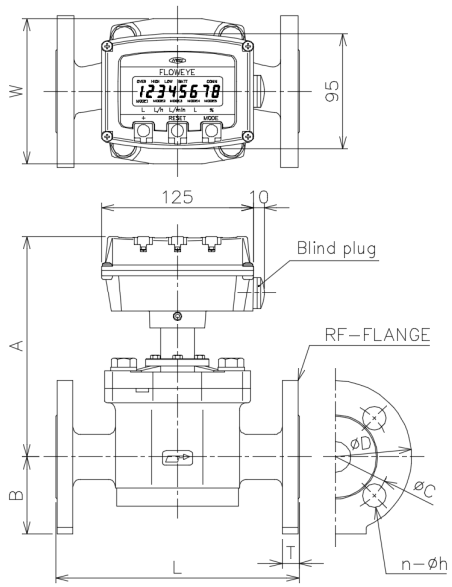

Pulse, & alarm output, and analog output type

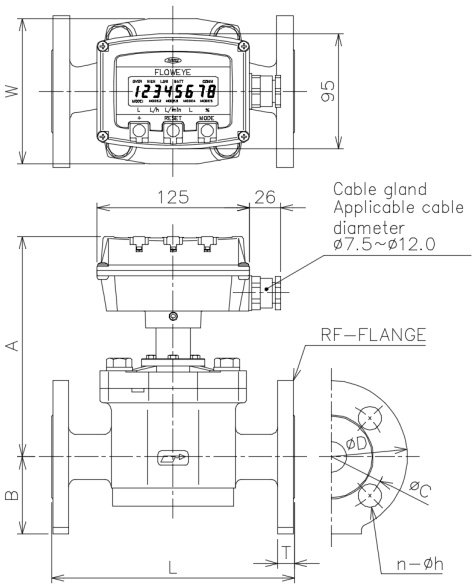

Nominal size & symbol	Nominal size	Flange standard	L	A	B	W	D	T	C	n	h	Weight (kg)
020A0	20A	JIS10K	160	167	51	90	100	14	75	4	15	5
025A0	25A	JIS10K	200	182	64	120	125	15	90	4	19	9
040A0	40A	JIS10K	230	209	71	150	140	18	105	4	19	16

Batch type

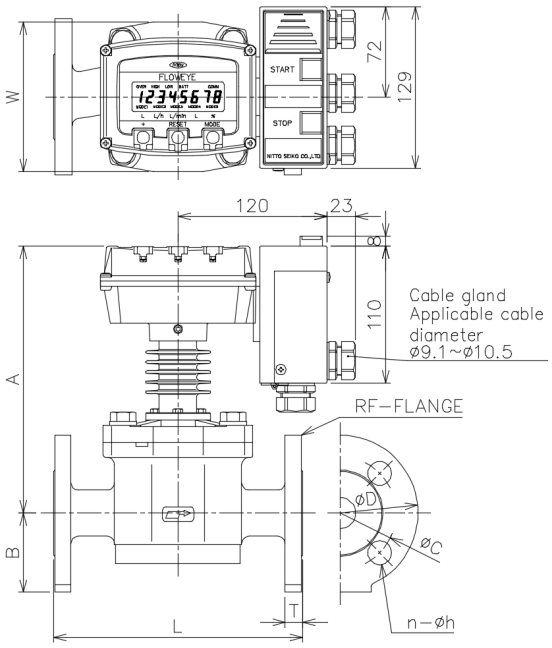

Nominal size & symbol	Nominal size	Flange standard	L	A	B	W	D	T	C	n	h	Weight (kg)
020A0	20A	JIS10K	160	199	51	90	100	14	75	4	15	6
025A0	25A	JIS10K	200	214	64	120	125	15	90	4	19	10
040A0	40A	JIS10K	230	241	71	150	140	18	105	4	19	17

8. Operation

8.1 Common operation

●Flow rate

Measure the time required for one turn of the rotor of the flow meter, calculates the flow rate and indicate the momentary flow rate.

●Total value

Integrally indicates the pulse signals from measuring unit in specified unit.

●Alarm

HIGH Indicated when flow exceed upper limit. ※2

LOW Indicated when flow is less than lower limit. ※2

BATT Indicated when battery capacity is low. Battery should be changed to new battery.
Activate only in case of flow meter with battery.

※2：Limit of alarm is canged by data setting.

8.2. Field indication type

●Operation

It indicates flow rate, total value and alarm operating by battery. It does not output pulse, alarm or analog signal.

8.3. Pulse & alarm output type

●Battery, external power supply

・Flow meter without battery type does not indicate flow rate, total value, or alarm without external power supply.

・Flow meter with battery type indicate flow rate, total value, and alarm without external power supply. However, It cannot output pulse or alarm signal without external power supply.
Battery power is not consumed while supply external power. It makes the battery life lengthen.

●Button operation

・The mode change as shown in figure below with pressing of the [MODE] button.

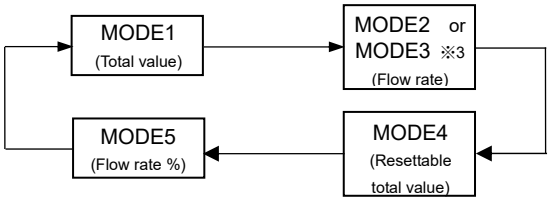

※3：Depending on the setting, “MODE2 (/h)” or ”MODE3 (/min)” is indicated.

●Reset operation

While indicating “MODE4” (Resettable total value), pressing [RESET] button makes total value reset to zero.

●Pulse output ※4

Unitless pulse output：Output pulse signal from measuring unit without any calculation.

Unit pulse output：Output specified unit of pulse signal.

●Alarm output ※4

Signal is output when reaching respective alarm point.

●Simulation output

Unit pulse or alarm output (except for battery alarm) is experimentally output.

※4：Output signal can be changed by data setting.

8.4 Analog output type

●Battery, external power supply

・Flow meter without battery type does not indicate flow rate, total value, or alarm without external power supply.

・Flow meter with battery type indicate flow rate, total value, and alarm without external power supply.
However, It cannot output analog signal without external power supply.
Battery power is not consumed while supply external power. It makes the battery life lengthen.

●Button operation

Refer to article of Pulse & alarm output type

●Reset operation

Refer to article of Pulse & alarm output type

●Analog signal output

Output flow rate as 4-20mA DC

●Simulation output

Analog signal is experimentally output.

8.5 Batch type

●External power supply

Both signal output and batch operation are unavailable without external power supply.

●Batch method

Subtract method

●Operation switch

[START], [STOP], [RESET]

●Setting of batch counter

Digits shift [RESET], Number change [+], Entry [MODE]

●Pulse output

Refer to article of Pulse & alarm output type

●Alarm output

Refer to article of Pulse & alarm output type

●Simulation output

Refer to article of Pulse & alarm output type

●Counting method

No-count of excessive volume method

Counter starts counting by pressing [START] button and subtract batch counter. Measuring is stopped when batch counter become zero. Also [STOP] or [RESET] operation can stop measuring.

Count of excessive volume method

Counter starts counting by pressing [START] button and subtract batch counter, and [RESET] function can stop measuring. However, in case of flowing the liquid after even if batch counter become zero, or after even if operation of [STOP], it keeps measuring. In case of becoming zero, it counts up.

●Reset method

Automatic reset

Automatically reset when batch counter become zero.

Manual reset

Not reset though batch counter becomes zero. Reset by [RESET] button.

●Button operation

The mode change as shown in figure below with pressing of the [MODE] button.

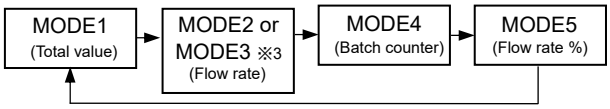

9. Terminal arrangement and wiring diagram

9.1 Terminal arrangement for pulse & alarm output

TB1

No.	Signal name
1	SIG1 Pulse output or alarm output
2	SIG2 Pulse output or alarm output
3	+12～24V
4	0V

TB2

No.	Signal name
1	Connect in case of batch type. Do not connect in case of other type.
2	
3	

9.2 Terminal arrangement for analog output

TB1

No.	Signal name
1	+ Analog output 4～20mA DC
2	−

9.3 Terminal arrangement for batch type

TB3

No.	Signal name	
1	Earth ground	
2	(+) Power	AC type 100～220V AC
3	(-)	24V DC type 24V DC
4	(+) Metering signal 1	
5	(-)	
6		Metering signal 2
7		
8		

TB4

No.	Signal name
1	SIG1 Pulse output or alarm output
2	SIG2 Pulse output or alarm output
3	0V

9.4 Wiring diagram for pulse & alarm output type

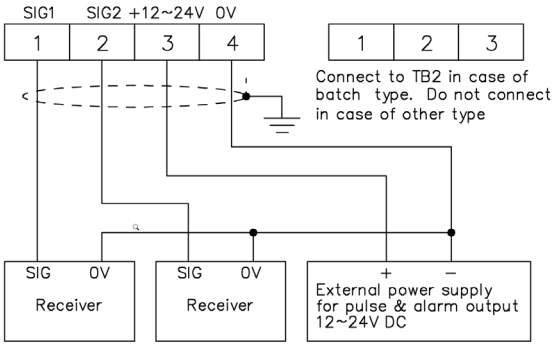

9.5 Wiring diagram for analog output type

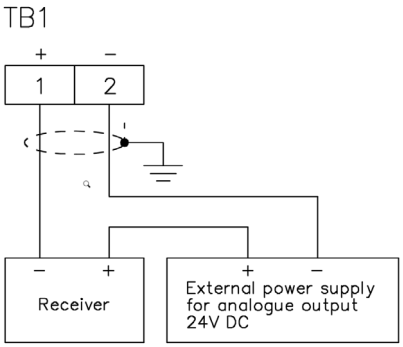

9.6 Wiring diagram for batch type

●AC type

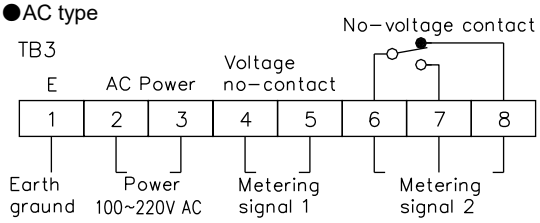

●24V DC type

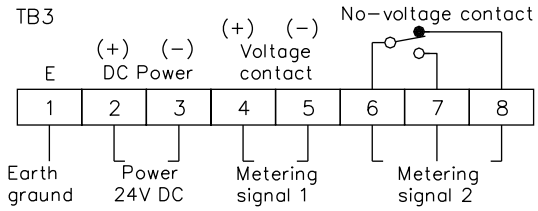

●Common of AC type and 24V DC type

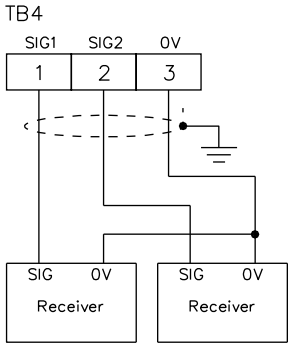

9.7 Circuit for pulse output and alarm output

Output signal / Switch / Kind of output signal	Pulse & alarm output SIG1		Pulse & alarm output SIG2	
	DS1-1	DS1-2	DS1-5	DS1-6
Voltage no-contact	OFF	ON	OFF	ON
Open collector	ON	OFF	ON	OFF

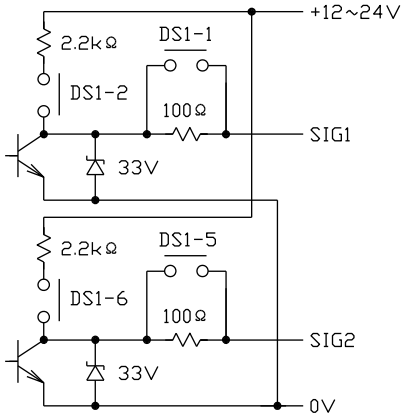

Output terminal No. / Name	Pulse & alarm output TB1Terminal No.	Batch type TB4Terminal No.
SIG1	1	1
SIG2	2	2
+12～24V	3	−
0V	4	3

10. Product code and specification code

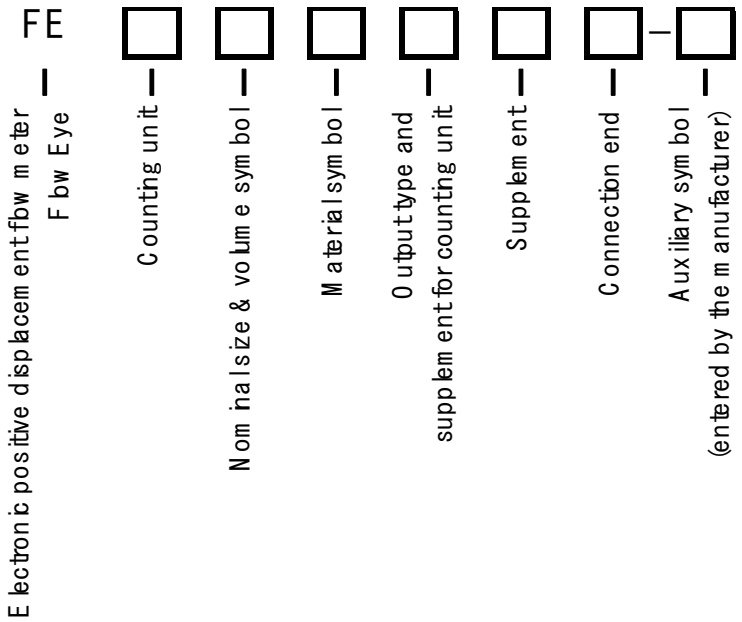

●: Standard; ○: Manufacturable; ×: Unavailable

Type	Specification code				Specification			025A0	025B0	040A0
FE					Electronic positive displacement flow meter Flow Eye			●	●	●
Counting unit	3E				Electronic indication			●	●	●
Nominal size & volume symbol		020A0			Nominal size: 20A			●		
		025A0			Nominal size: 25A				●	
		040A0			Nominal size: 40A					●
Material symbol			S2		Body, Body cover: SCS14			●	●	●
Output type and supplement for counting unit			12345		Field indication type (without output signal)	Non-explosion proof	With battery	●	●	●
			P0345		Pulse & alarm output ※5	Non-explosion proof	No battery	●	●	●
			P00B0				With battery	○	○	○
			A0345		Analog output	Non-explosion proof	No battery	●	●	●
			A00B0				With battery	○	○	○
			PB345		Batch: AC ※5	Non-explosion proof	No battery	●	●	●
			PC345		Batch: 24V DC ※5	Non-explosion proof	No battery	●	●	●
Supplement				0	No Supplement.			●	●	●
				1	When selecting batch type			○	○	○
Connection end				010R	JIS10K RF Flange			●	●	●

※5 SIG1 and SIG2 output of standard article are delivered with the following setting.

SIG1 output :	Kind of signal	Voltage no-contact
	Electronic logic	Positive logic
	Pulse output	Unitless pulse output
SIG2 output :	Kind of signal	Voltage no-contact
	Electronic logic	Positive logic
	Pulse output	Unit pulse output

11. Strainer

To prevent foreign matters mixed in the liquid from penetrating into the flow meter to cause troubles, it is necessary to install a strainer immediately before the flow meter or at a point as close as possible to the inflow side.(Element mesh:60～100 mesh)

◆◆◆◆◆◆◆ Matters to be specified at the time of ordering ◆◆◆◆◆◆◆

1. Type and specification code.
2. Name of measured liquid, viscosity, temperature.
3. Flow direction of fluid, mounting position.

▼The contents given here are subject to change without notice.

NITTOSEIKO CO.,LTD.
30 Nogamibata, Nobu-Cho, Ayabe, Kyoto 623-0041, JAPAN
TEL : +81-773-43-3151(Domestic Operation)
+81-6-6105-5086(Global Sales Section)
FAX : +81-773-43-3155
E-mail:sales@nittoseiko.co.jp
https://www.nittoseiko.co.jp/en.html